MICAD

THE CREATIVE
ENGINEERING COMPANY

DESIGN PROCESS
&
TYPICAL DELIVERABLES

ACTIVITIES AND DESIGN STEPS

MICAD
THE CREATIVE ENGINEERING COMPANY

Brief and design proposal

- Customer Brief
- Benchmarking
- User Experience analysis
- Sketches and profiles
- Preliminary General Arrangements

Feasibility study

- 3D model and exterior renderings
- 3d interior model, ergonomics and renderings
- Preliminary Engine room arrangements and Capacity Plan
- Preliminary structural analysis
- Preliminary Systems Drawings
- Weight estimation
- Technical specs and product brief

Naval Architecture

- Hull geometry
- Hydrostatic and stability calculation
- Resistance and propulsion
- Seakeeping and Manouverability
- Structural FEA

Detailed Engineering

- Detailed 3d models for milling machine
- Detailed structural drawings 3d and 2d drawings
- Detailed systems 3d and 2d drawings
- Detailed furniture 3d and 2d drawings
- Detailed deck appliances and kinematims

Classification and validation

- CE or Class and Flag documentation
- Support during the costruction
- Validation requirements and inspection for geometries, structures, systems
- Instrumented sea trials and report
- Support during the inspections

BRIEF AND DESIGN PROPOSAL

Where the concept is defined

BENCHMARKING

MICAD
THE CREATIVE ENGINEERING COMPANY

Percorsi main deck da poppa a prua

Main deck

Percorsi lower deck da poppa a prua

Lower deck

Si aumenta la superficie della zona prendisole di poppa

Main deck

Il layout della coperta è stato progettato in modo che dal divano si potesse avere panorama senza ostacoli

Cranchi 60 HT

Hard top

Lower deck

La cabina armatoriale è posto a centro barca, con letto in basso che permette di avere una maggiore altezza

Struttura
Carena:
Lunghezza fuori tutto: 19,17/18,92 m (senza pulpito)
Lunghezza scafo:
Larghezza max: 4,87 m
Immersione: 1,49 m
Dislocamento : 29,18 t
Massima velocità: 36-38 Kn
Impianti
Capacità carburante: 3.250 l
Capacità d'acqua: 603 l (incluso boiler)
Capacità serbatoio acque nere: 250 l
Capacità acque grigie:
Interni
Cabine: 3 + 1 crew
Posti letto: 6 + 1 crew
Servizi: 2 + 1 crew
Motore: due motori MAN V8 da 1200 CV
Anno di costruzione: 2018

Princess v60

Hard top

Sun deck

- Sunlounger
- Zona prendisole

Main deck

- Pozzetto: lounge setting and dining wetbar
- Dinette
- Timoneria Helm station
- Cambusa

Lower deck

- Cabina vip
- Cabina ospiti
- Cabina armatoriale
- Sala macchine
- Cabina crew

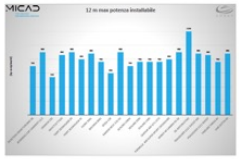

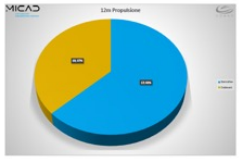

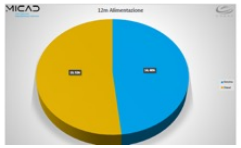

Studio dei profili

Hard top

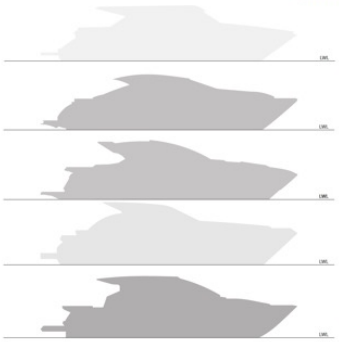

MICAD
THE CREATIVE ENGINEERING COMPANY

Benchmark imbarcazioni 12 metri

COMAY

Cantiere	Modello	Categoria	Misure LF (m)	Misure Bma (m)	Misure Dislocamento (kg)	Accomodamento Ad.CE	Accomodamento Eq.	Accomodamento Cabine	Accomodamento Bagni	Accomodamento Cucina	Accomodamento W	Motorizzazione Potenza (hp)	Motorizzazione Elettronica	Motorizzazione Alimentazione	Prezzi Netto (€)	Prezzi Configurato (€)	Esterni	Interni e arrangiamento
Beneteau	Gran Turismo 36	Cruiser	11,58	3,51	7135-7179	8+C	8+C2	2+2	1	1	2	350	Stranaline	Diesel	180	2 x 400-500		
Jeanneau	Cap Camarat 12.5	Walkaround	12,27	3,57	5880	8+C	11+C2	3+2	1	1	3	300	Outboard	Benzina	200	1180		
Cranchi	E55	Cruiser	11,7	3,49	7250	8	N.P.	2+2+1	1	2	2	270	Stranaline	Diesel	190	600		
Invictus	TT420	Walkaround	12,3	4,15	11998	—	14	2+2	1	2	2	860	Outboard Stranaline	Benzina Diesel	230	1254		
Tiam	Grandtour 39	Walkaround	11,91	3,86	7650	8	12	2+2	1	2	2 2	510-440 300-350	Stranaline Outboard	Diesel Benzina	820	940		

USER EXPERIENCE

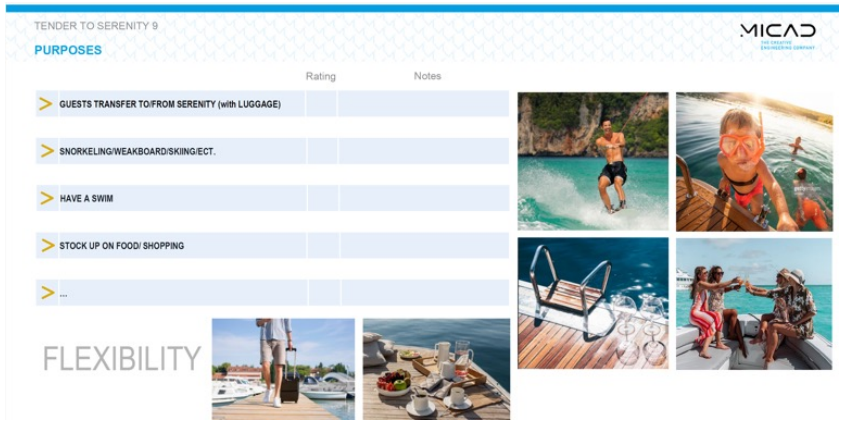

Sketches and profiles

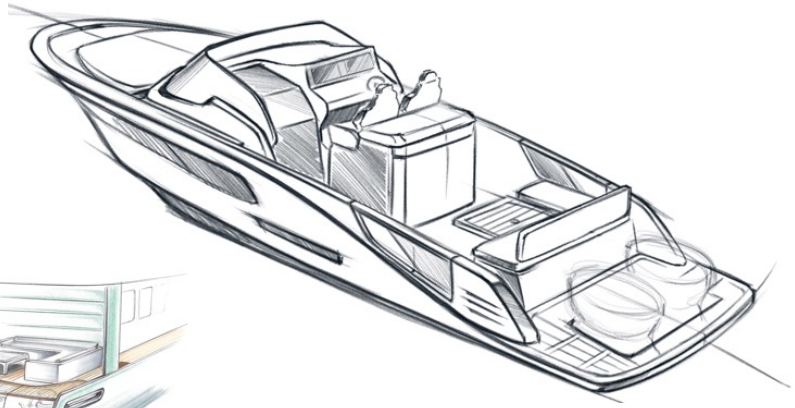

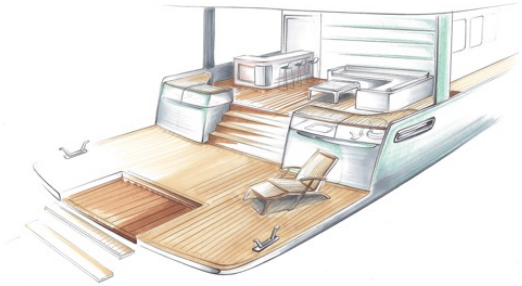

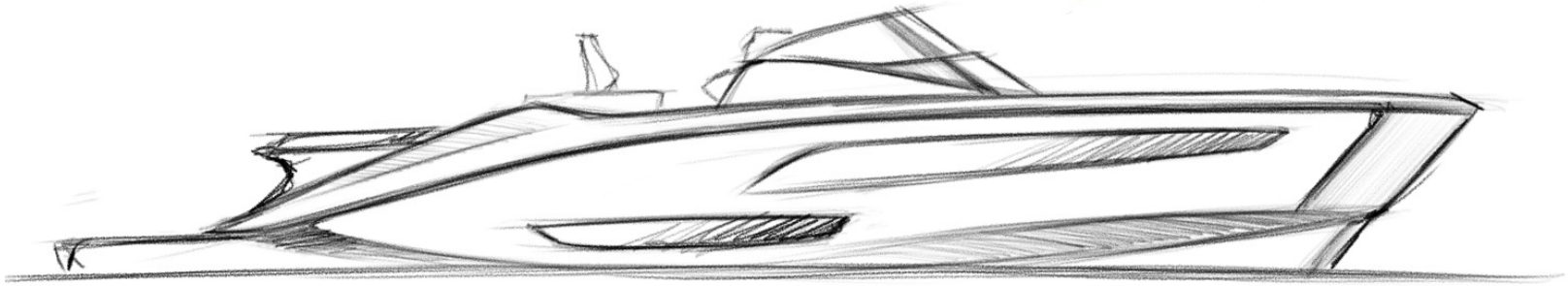

GENERAL ARRANGEMENT PROPOSALS

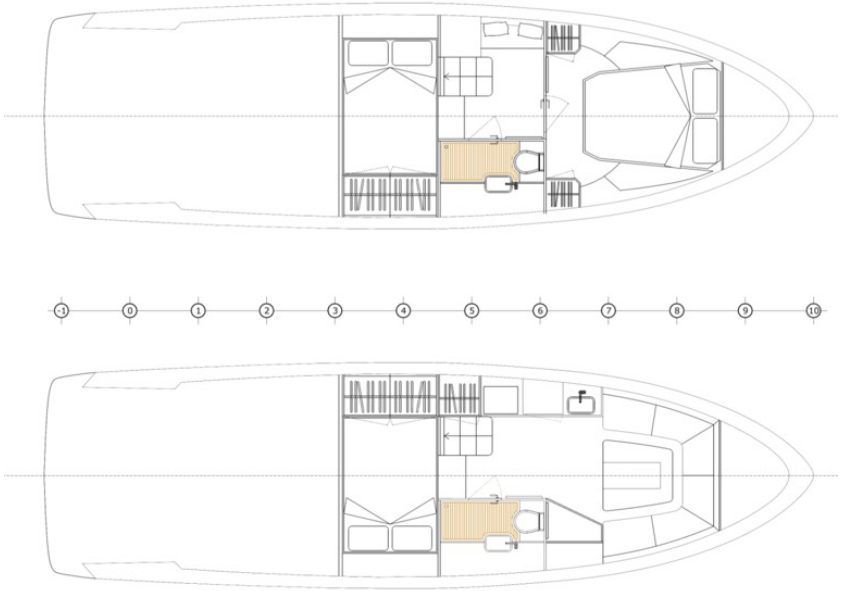

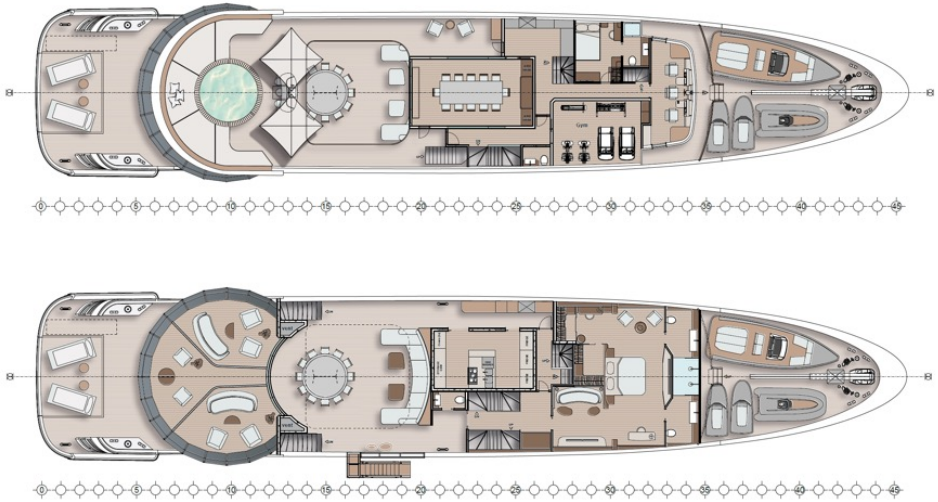

FEASIBILITY STUDY

Where the concept is validated

EXTERIOR RENDERINGS

INTERIOR RENDERINGS

PRELIMINARY ARRANGEMENT (ENGINE ROOM AND CAPACITY PLAN)

DISEMBARKING SEQUENCES

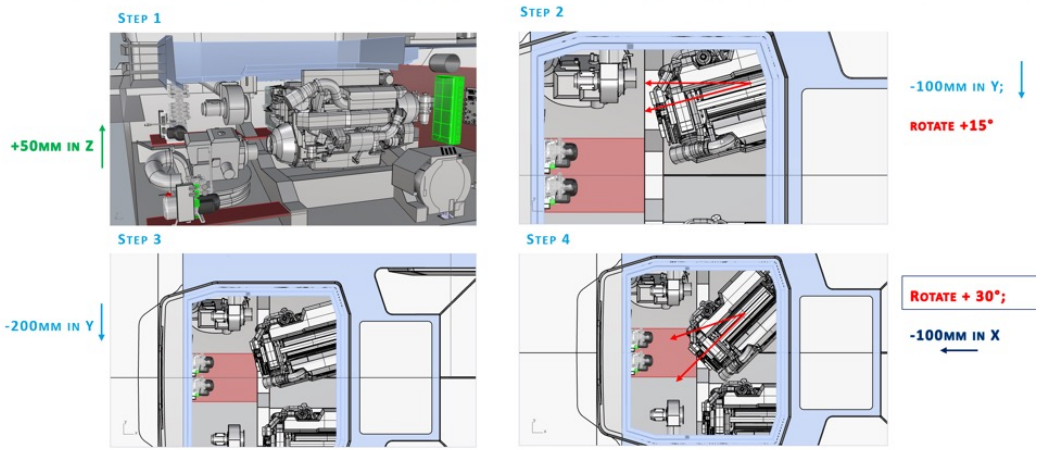

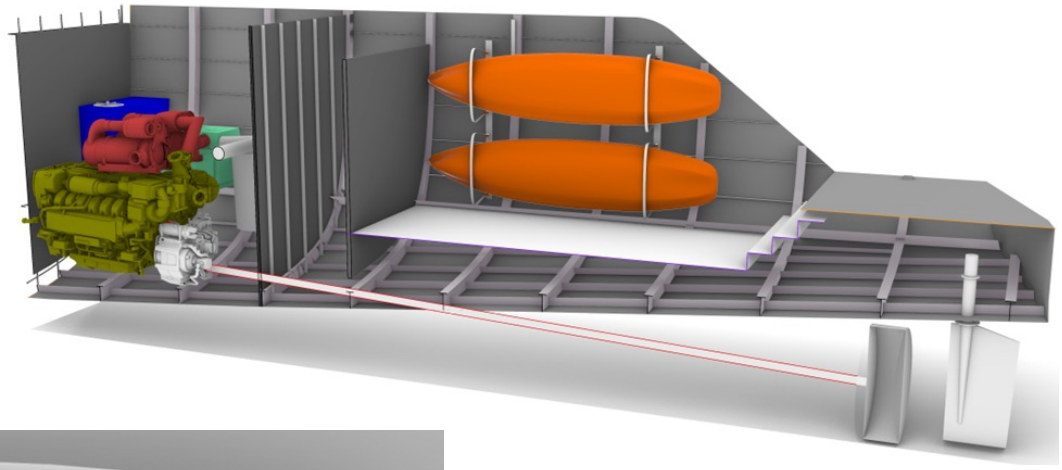

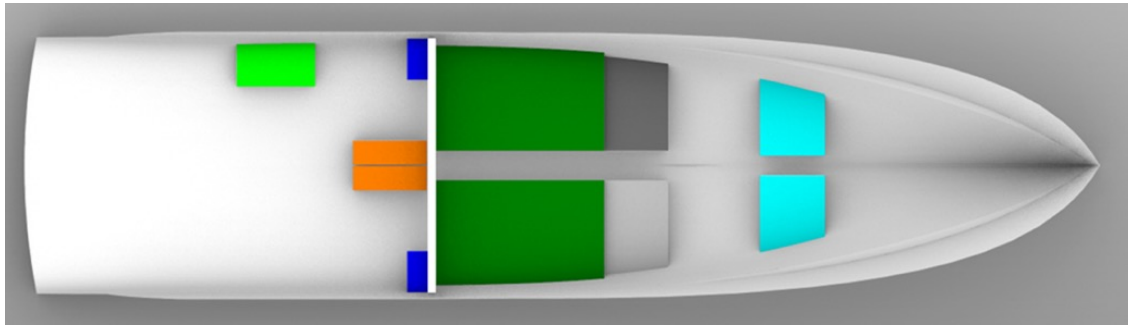

PRELIMINARY STRUCTURAL ARRANGEMENT

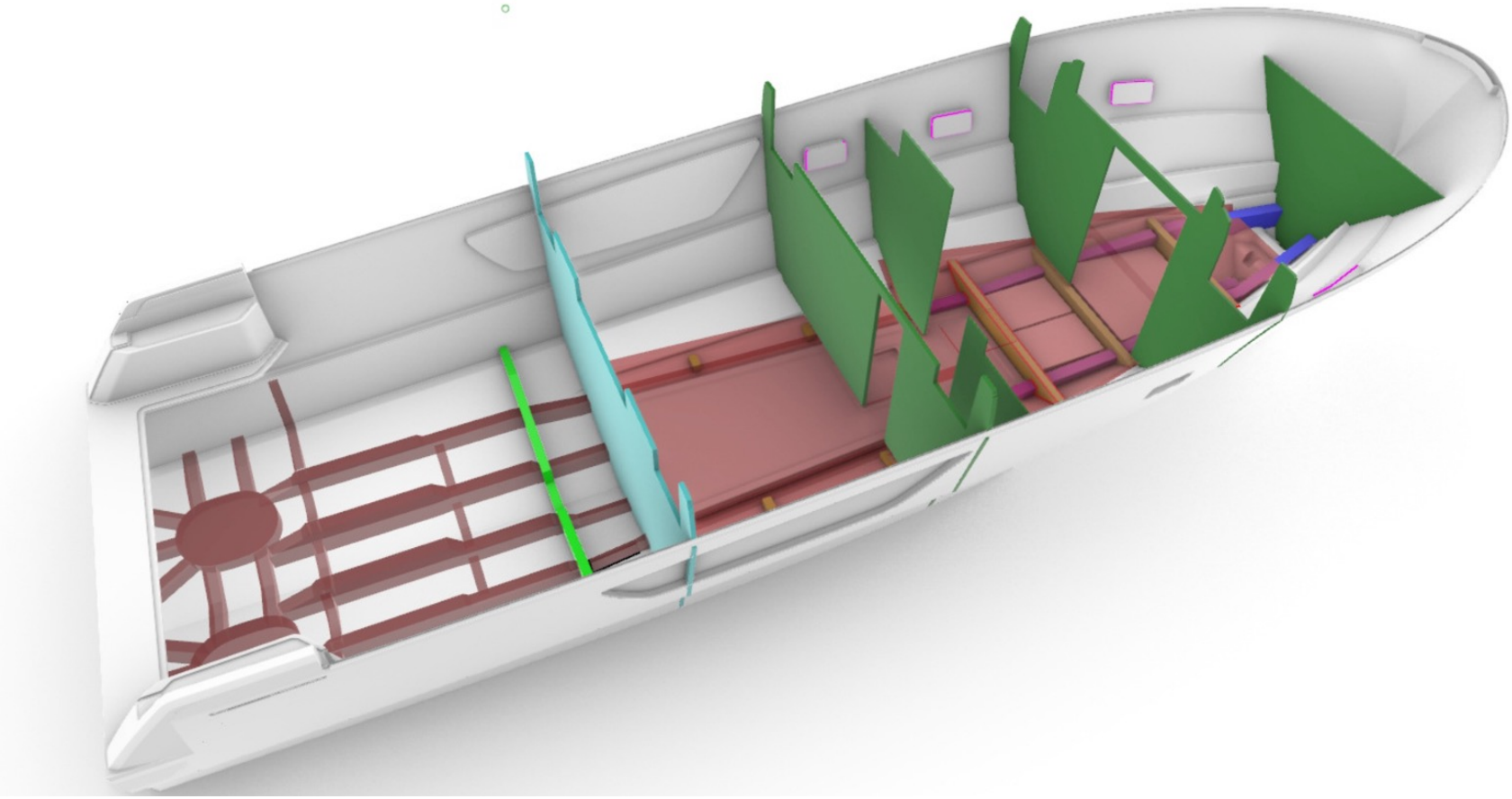

PRELIMINARY SYSTEM DRAWINGS

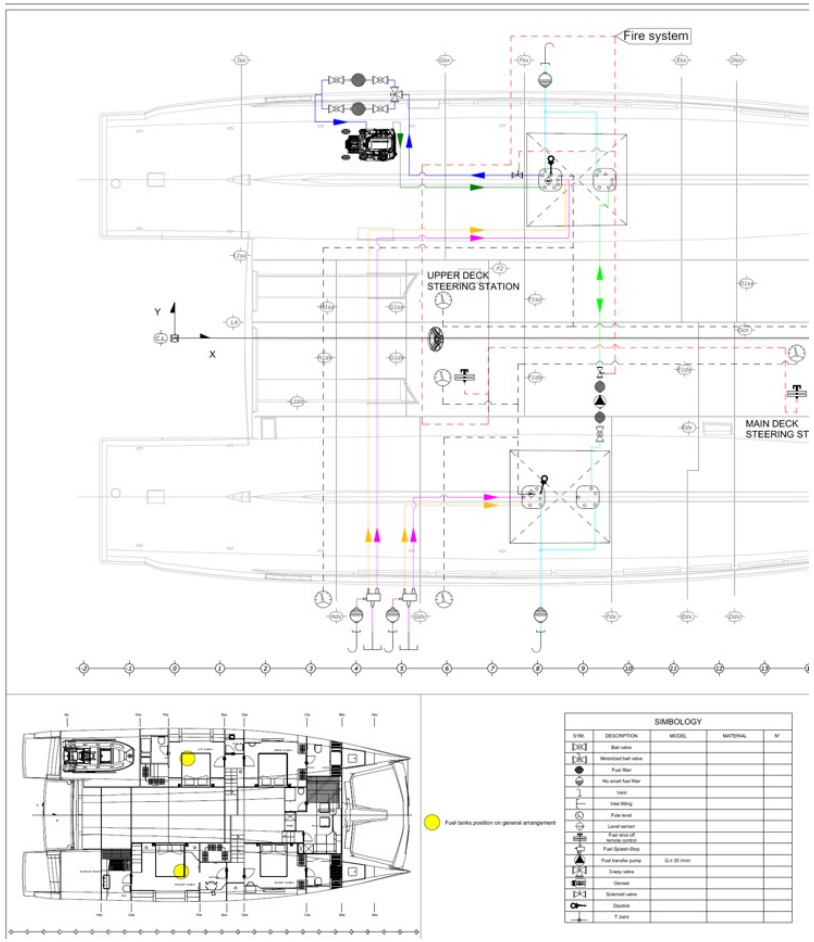

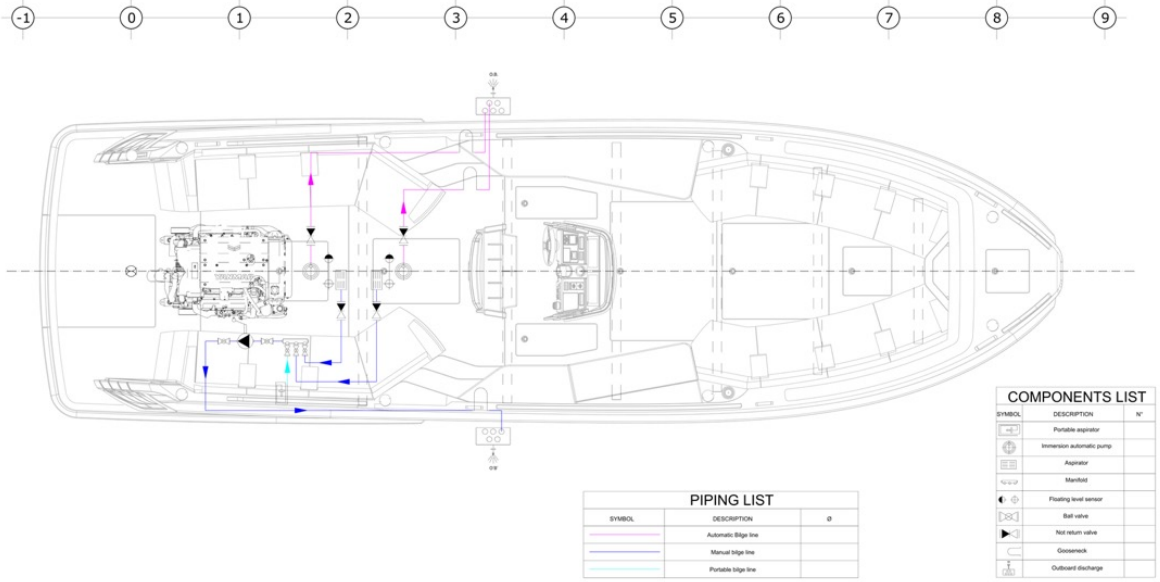

WEIGHT ESTIMATION

FJ4X - #1

Load case

Project details:

Length:	14.35 m
Beam:	4.56 m
Variant name:	#01
Version list:	Walkaround
Propulsion list:	D8-600 IPS800
Optional Items list:	Inboard engines

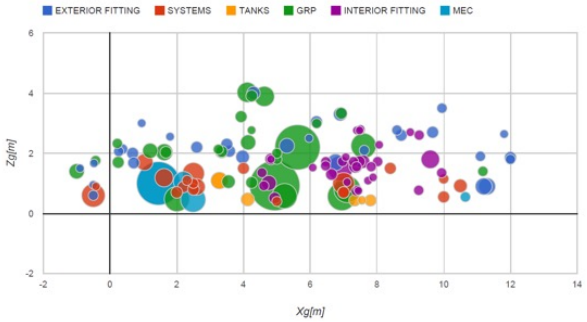

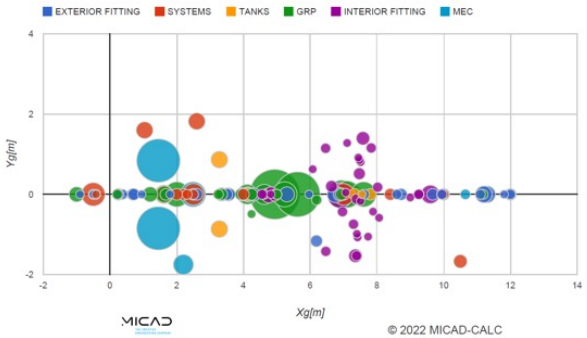

© 2022 MICAD-CALC

FJ4X - Prototype Items

Name	List	Job	Topological	Weight	Xg	Yg	Zg	Quantity	Product
Aft gates	baselineItem	EXTERIOR FITTING	Deck	33	0.378	0	2.14	2	OVERBOARD FALLING PREVENTION EQUIPMENTS
Anchor	baselineItem	EXTERIOR FITTING	Deck	20	12	0	1.8	1	MOORING AND ACHORING ANCHOR LOCKER
Anchor folding bow roller	baselineItem	EXTERIOR FITTING	Hull	69	12	0	1.86	1	MOORING AND ACHORING ANCHOR LOCKER
Anchor sys Hydraulic power pack	baselineItem	SYSTEMS	Hull	38.5	10	0	1.15	[illegible]	
Balcony handrails	baselineItem	EXTERIOR FITTING	Deck	9.7	1.8	0	2.552	[illegible]	
Bath ladder	baselineItem	EXTERIOR FITTING	Deck	17.25	-0.5	0	0.6	[illegible]	
Batteries AGM 12 V Ah 130	baselineItem	SYSTEMS	Module	159.6	2.6	1.821	0.882	[illegible]	
Bilge system	baselineItem	SYSTEMS	Widespread	28.75	5	0	0.4	[illegible]	
Black water	baselineItem	SYSTEMS	Widespread	55	7	0	0.7	[illegible]	
BLACK WATER TANKS	baselineItem	TANKS	Hull	46	7.807	0	0.435	[illegible]	
BOILER	baselineItem	SYSTEMS	Engine Room	84	10.5	-1.67	0.918	[illegible]	
Bow sunpad cushions	baselineItem	EXTERIOR FITTING	Deck	54	9.67	0	2.7	[illegible]	
Chain 50m ø12mm	baselineItem	EXTERIOR FITTING	Hull	172.52	11.3	0	0.9	[illegible]	
Cleats	baselineItem	EXTERIOR FITTING	Deck	9.76	5.966	0	2.5	[illegible]	

© 2022 MICAD-CALC

FJ4X - #1

Optional item
50m extra chain
8 fenders + pins
AC
Additional grey water tank
Aft sun awning
Balcony
Bow Thruster
Cleats on platform (for tender only)
Fore sun awning
Gangway
Generator
Hydraulic platform lifting system
Inverter/charger, 3000 W - 150A
Seabob
Seakeeper 5 + 15% margin
Teak
Underwater lights
Volvo Penta active corrosion protection

4 PROPULSION & PERFORMANCE

ENGINE NR	Nr	1
ENGINE TYPE	Type	YANMAR
ENGINE MODEL	Type	8LV - (V8-90°)
ENGINE POWER - RPM	HP / KW	370 HP (272 KW) -
RATED SPEED	RPM	3.800
STERNDRIVE	Type	YANMAR - ZT-370
CONTROL	Type	ELECTRONIC
COMBUSTION SYSTEM	Type	COMMON RAIL
FUEL	Type	DIESEL
FUEL CONSUMPTION AT CRUISING SPEED	l/h	45 *
RANGE AT CRUISE SPEED	MN	150 *
CRUISING SPEED	Kn	25÷27 *

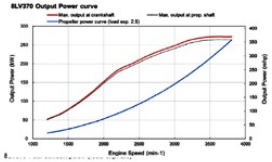

8LV370 Torque curve

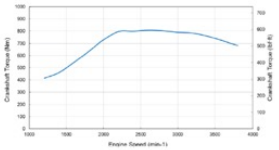

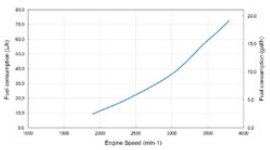

© MICAD s.r.l. – All rights reserved

5 CONSTRUCTION & TECHNOLOGY

DESIGN CATEGORY	Cat.	B + C
COMPOSITE STRUCTURE	Type	CARBON FIBER
TECNOLOGY	Type	VACUUM INFUSION

6 HULL DESIGN & DECK EQUIPEMENTS

- "Deep-V" bottom planing hull
- approx. 6m² x darkened plexiglass sides coatings (5mm thick)
- approx. 25m² x synthetic teak deck flooring (in line with the mother ship's type and colors)
- Finishing surface painted with **Awlgrip Oyster White** Coating (as for the mother ships)
- Standing helm console with high-low electric mechanism (range of about 150 mm)
- 2x GRP white cabinets one per side, with black top (foldable only on the stbd side due to the sink)
- 4x cabinet doors (with teak and fabric refinements)
- 2x cabinet fridge's doors (with teak and fabric refinements)
- 2x AISI316 s/s astern extraction grids
- 1x reinforced eye-bolt forward for Lift and Launch
- 2x reinforced eye-bolts astern for Lift and Launch
- 1x spread bar for Lift and Launch
- 2x under deck watertight luggage's lockers
- 2x storage locker for telescopic poles and Awnings Systems (please quote separately)*
- 2x small bulwark lockers + closing doors
- 1x storage astern locker for swim ladder and gangway
- 8x telescopic carbon poles for awnings supports (IP6617 by i-Carbon)
- 8x pop-up deck self-draining sockets (IP6600 by i-Carbon)
- Custom carbon flag pole (including 360° nav. light on top)
- Manual foldable carbon gangway (Xquip), including 2x deck sockets
- Manual foldable carbon swim ladder (around 1000x650x231mm) (Xquip), including 2x deck sockets

7 APPLIANCES & GUEST ACCOMODATION

- Double pilot seating - fabric or leather (in line with Mother Ship's material and color)
- 18m² x Upholstery Package - fabric or leather (in line with Mother Ship's material and color)
- 10x folding armrests + 6x fixed armrests
- 16 x cup holders on armrests
- 2 x cup holders inside the cabinets
- 2 x Vitrifrigo DW 75L s/steel drawer fridge (please quote separately)*
- 1x Moulded sink on the stbd cabinet
- 1x Mixer-tap with extractable faucet OZ (by Forsti&Suardi)
- Folding-top on stbd-side cabinet (including gas-springs and s/s hinges)
- Glass holders' cabinets with leather refinements
- 1x waste bin
- 1x retractable shower (by Forsti&Suardi)
- 1x plug-in carbon shower (T-Carbo/Y by Inoxstyle) (please quote separately)*

© MICAD s.r.l. – All rights reserved

NAVAL ARCHITECTURE

Where performances are improved

HULL SHAPE

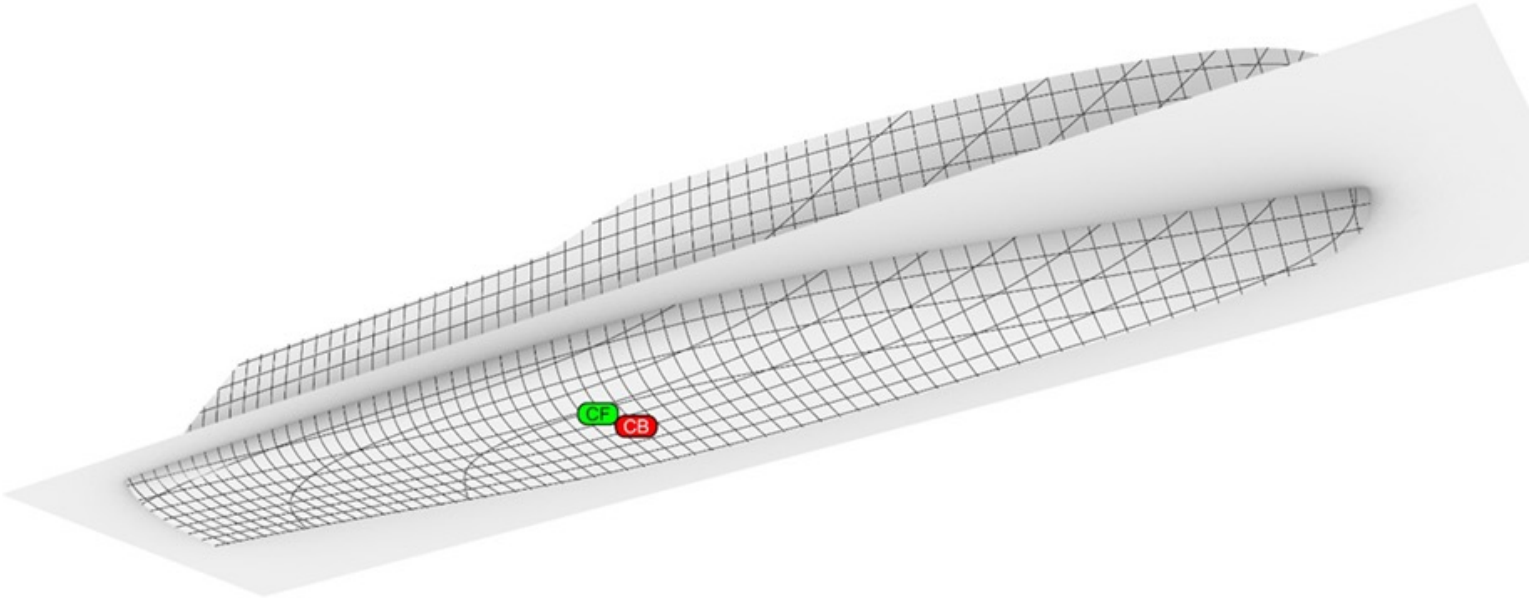

PERFORMANCE PREDICTION

MICAD
THE CREATIVE ENGINEERING COMPANY

PERFORMANCES AND CONSUMPTION DATA

SF YACHTS

ENGINEERI

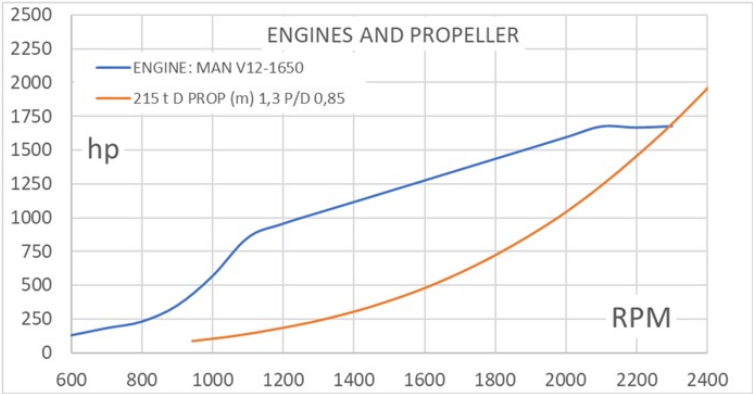

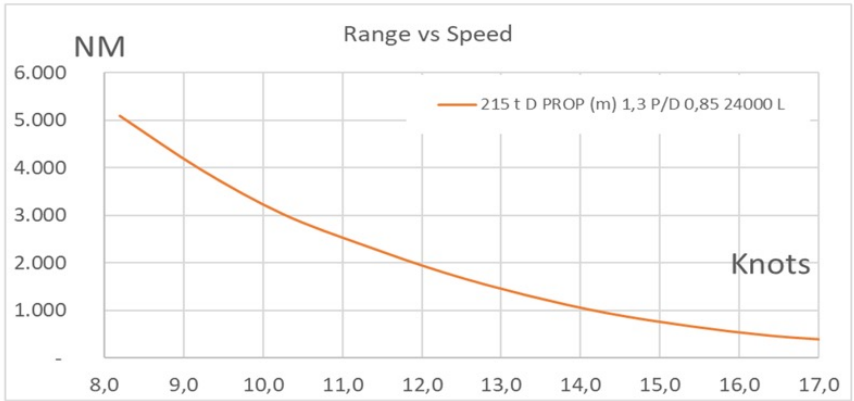

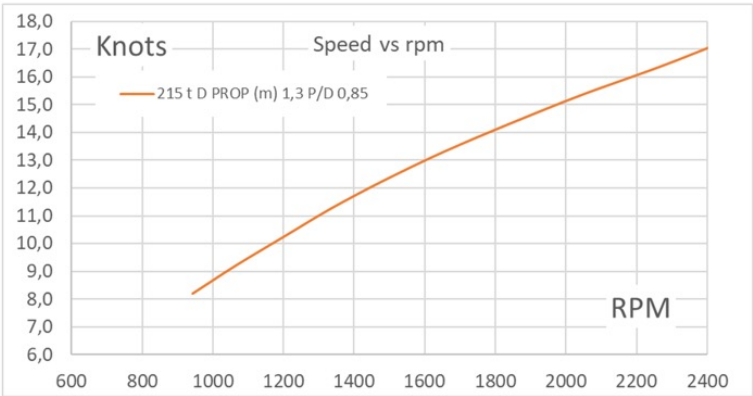

Velocity: 12.86 (m/s)
DFBI Sinkage: 177.047 (mm)
DFBI Trim: -3.65023 (deg)
VirtualDiskThrust: 83053.9 (N)
XcompThrust: 75214.1

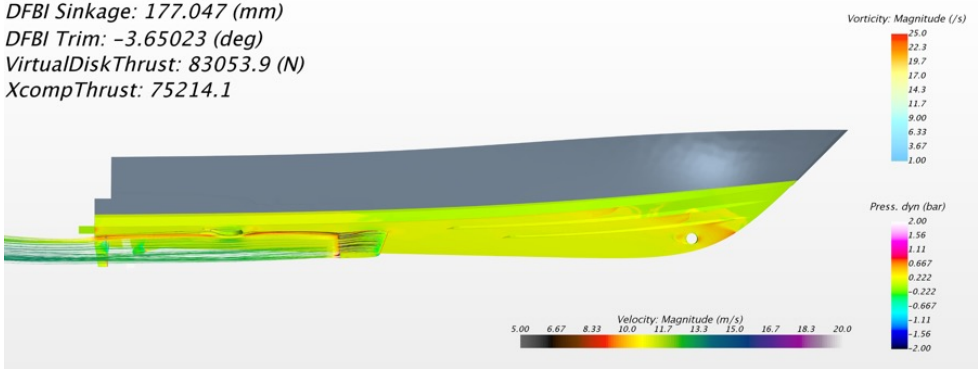

STABILITY CALCULATION ACCORDING ISO STANDARD

ISO 12217-1:2017 CALCULATION WORKSHEET No. 6d curve of righting moment m_{WO}

SVP Avio d.o.o. Greenline 58 Fly

insert curve of righting moment in 5° steps in one of following units:

	N m	kg m	m
chosen unit	N m		
chose of M_W	MW1		

heel angle[°]	insert Righting Arm/Moment [Nm, kg m, m]	Righting Moment [Nm]	Righting Moment [kg m]	Arm Gz [m]	Wind Heeling moment curve [m]
-25	-100111.1428	-100111	-10209	-0.385	0.1282
-20	-97096.47683	-97096	-9902	-0.374	0.1282
-15	-87866.52565	-87867	-8960	-0.338	0.1282
-10	-69894.99582	-69895	-7128	-0.269	0.1282
-5	-42040.15667	-42040	-4287	-0.162	0.1282
0	-1.757907644	-2	0	0.000	0.1282
5	42039.68729	42040	4287	0.162	0.1282
10	69902.48991	69902	7129	0.269	0.1282
15	87875.78834	87876	8961	0.338	0.1282
20	97107.96757	97108	9903	0.374	0.1282
25	100115.9296	100116	10210	0.385	0.1282
30	100889.8913	100890	10289	0.388	0.1282
35	100640.6486	100641	10263	0.387	0.1282
40	100964.3965	100964	10296	0.388	0.1282
45	102228.3887	102228	10426	0.393	0.1282
50	103845.7363	103846	10590	0.400	0.1282
55	101452.24	101452	10346	0.390	0.1282
60	87873.70964	87874	8971	0.338	0.1282
65	67438.53651	67439	6877	0.259	0.1282
70	43199.59807	43200	4405	0.166	0.1282

area A1 and A2 limits

	heel degrees		heel degrees	
A1 from	-16.81	to	3.96	below M_W
A2 from	3.96	to	50.00	above M_W

point of intersection of righting moment curve and wind heeling moment curve

Φ_W
3.962

Mw	33311	Nm
Mw	3397.0	kg m
Mw	0.128	m
Φ_W	3.96	degrees
Φ_{A2}	50.00	degrees
Φ_R	20.77	degrees

Max mMO	0.400	m
heel at GZ max	50.00	degrees

INTERNATIONAL MARINE CERTIFICATION INSTITUTE
INTERNATIONAL NON-PROFIT ASSOCIATION

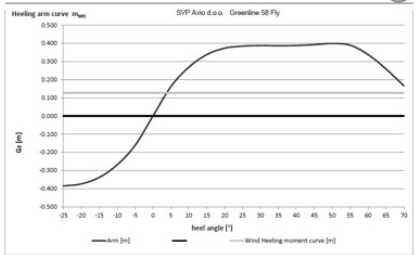

GL55_05_06_11_Calculation_Tool_ISO_12217-1_CAT_B_01 07/02/2024

GL55 Flybridge

GL55 Flybridge - Stability calculation at mla

Greenline

Report Time: Tuesday, February 6, 2024, 10:40:06 AM

Model Name: G:\.shortcut-targets-by-id\0B-U3GDF4RYwbSk9fVXFxYVl5cjA\MICAD\03_INGEGNERIA\083_GL55\05_DESIGN_VALIDATION\06_STABILITY

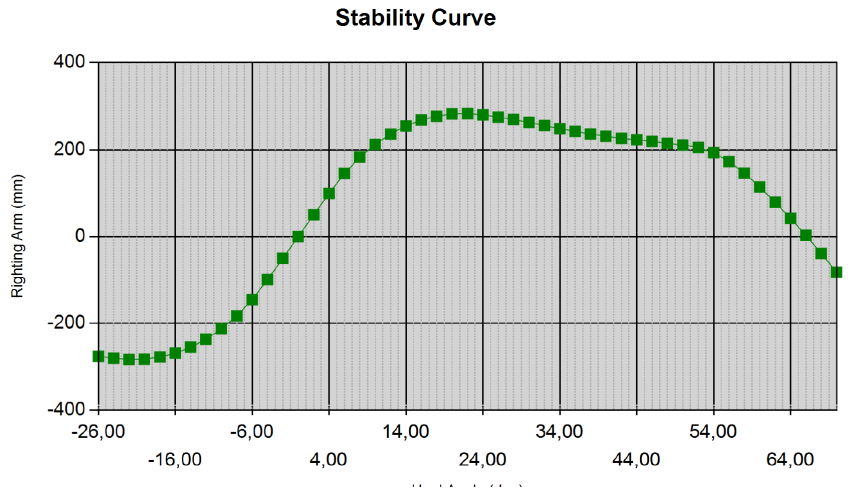

DETAILED ENGINEERING

Where costs are controlled

DETAILED 3D MODELING

MICAD
THE CREATIVE ENGINEERING COMPANY

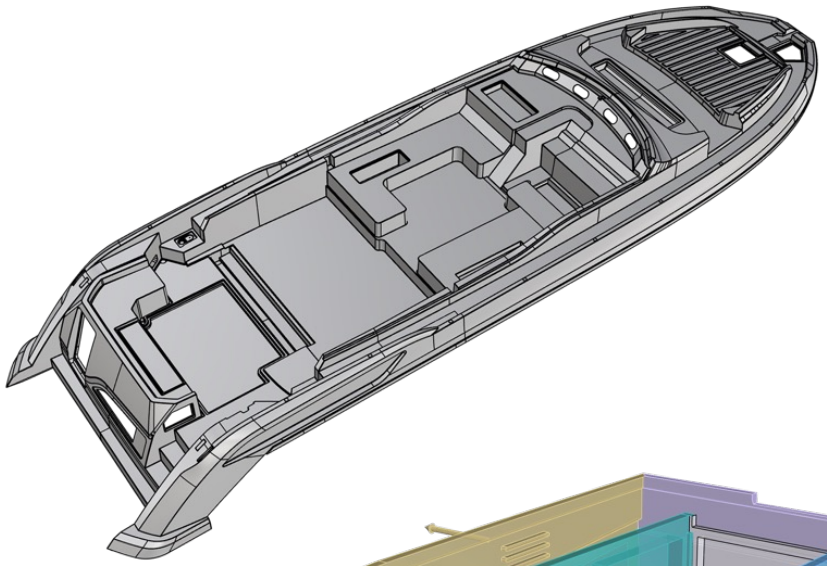

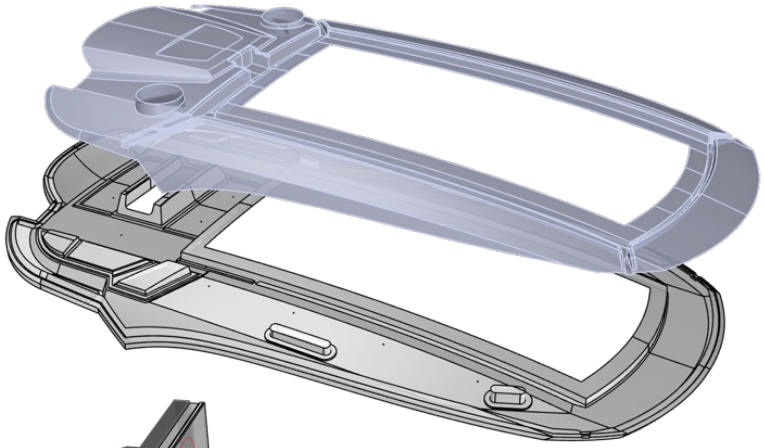

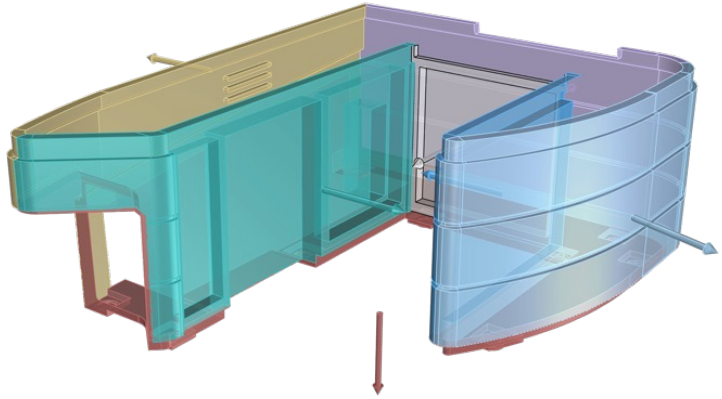

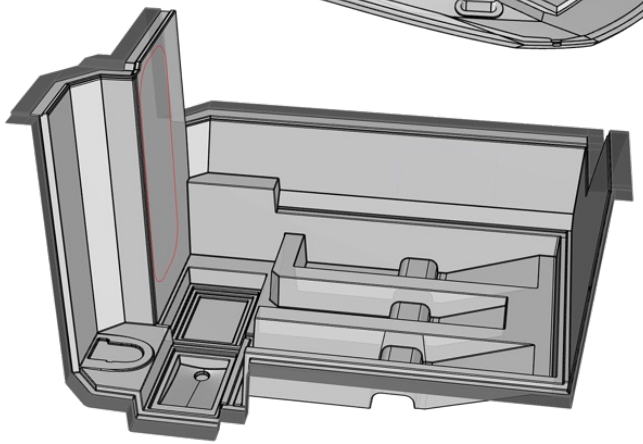

STRUCTURAL DRAWINGS AND CALCULATIONS

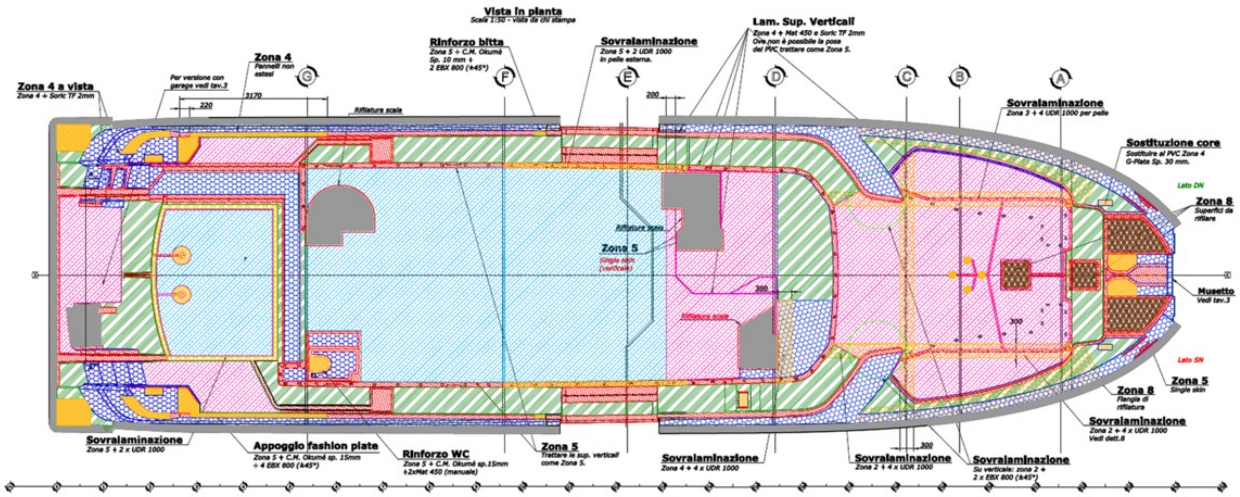

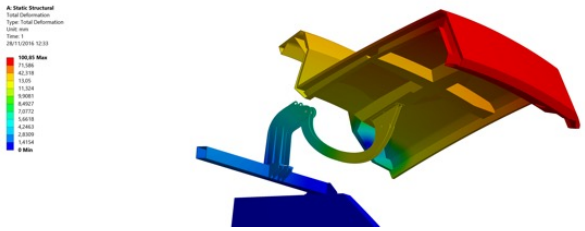

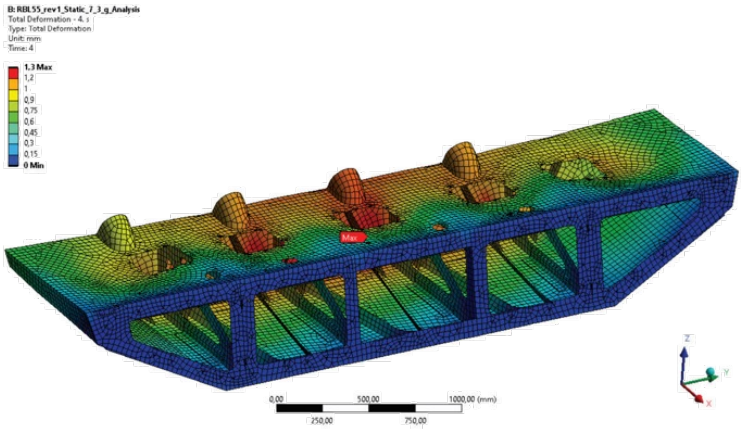

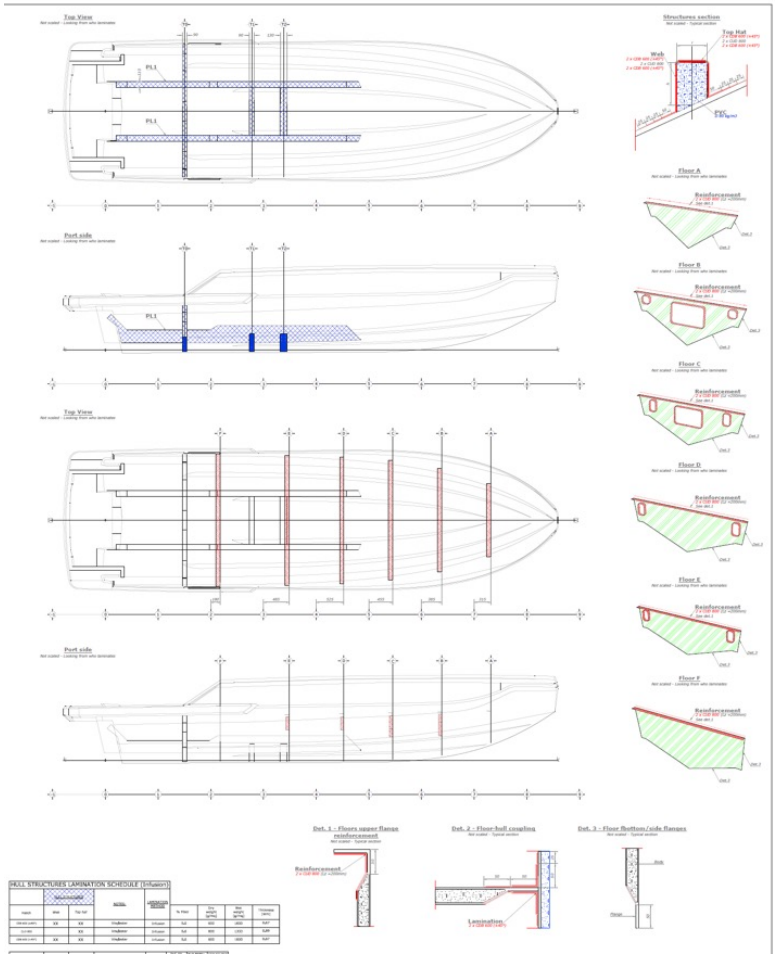

SYSTEMS

MICAD
THE CREATIVE ENGINEERING COMPANY

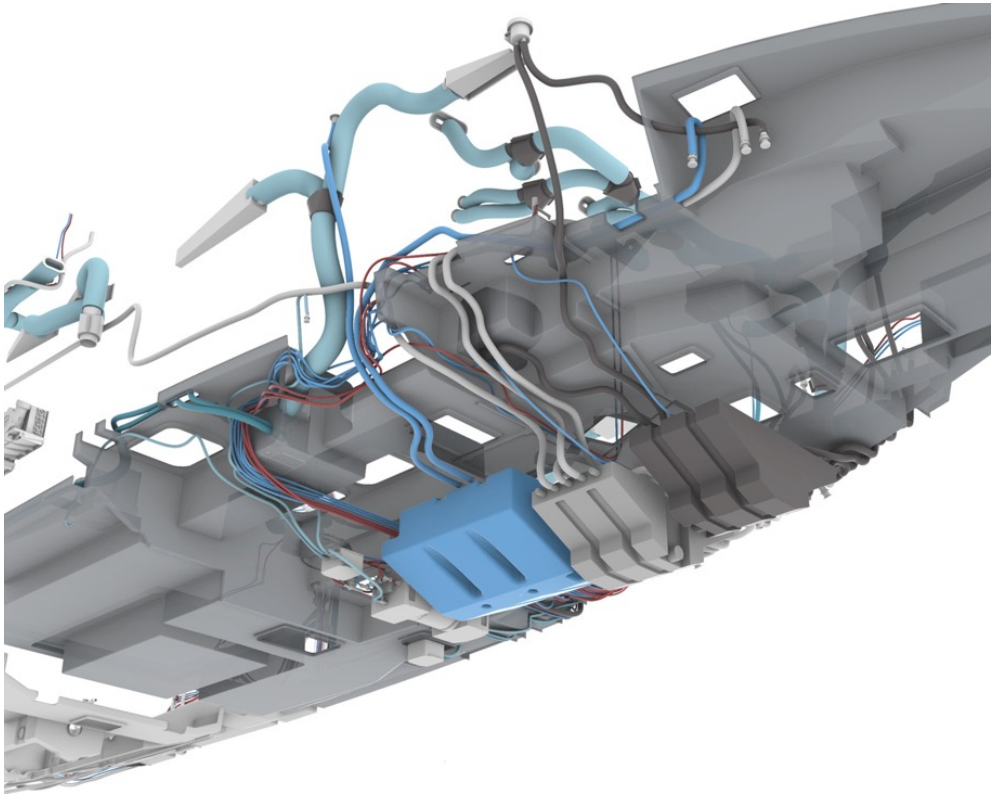

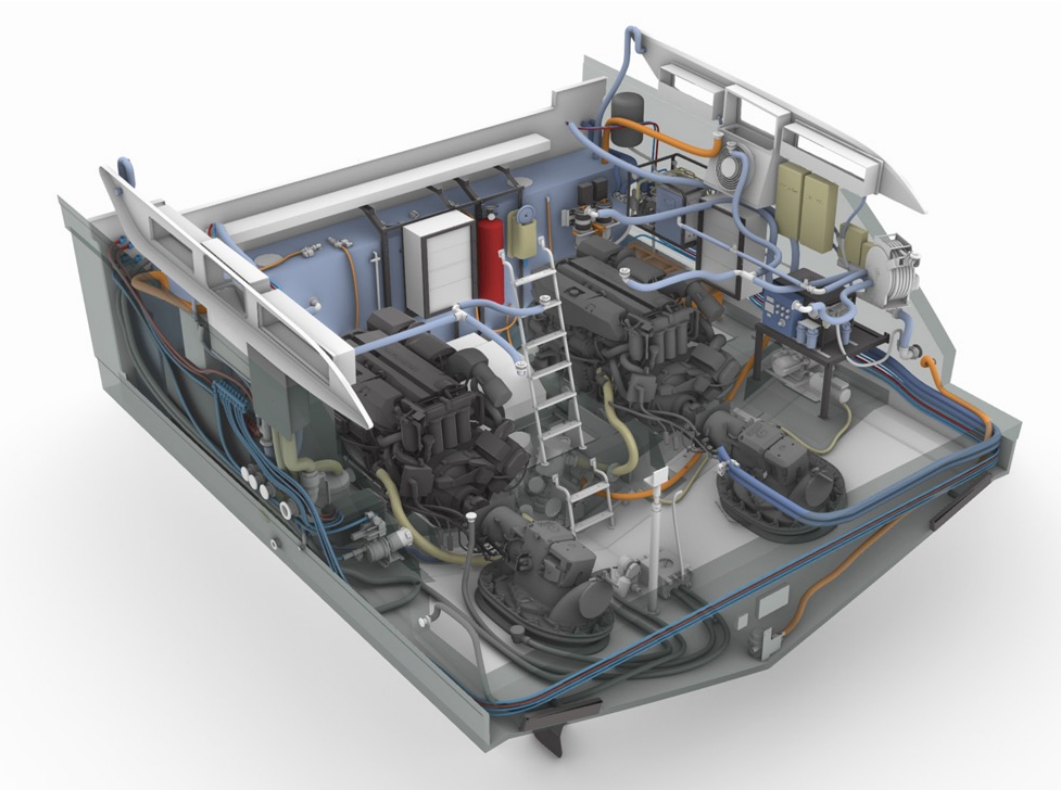

INTERIORS

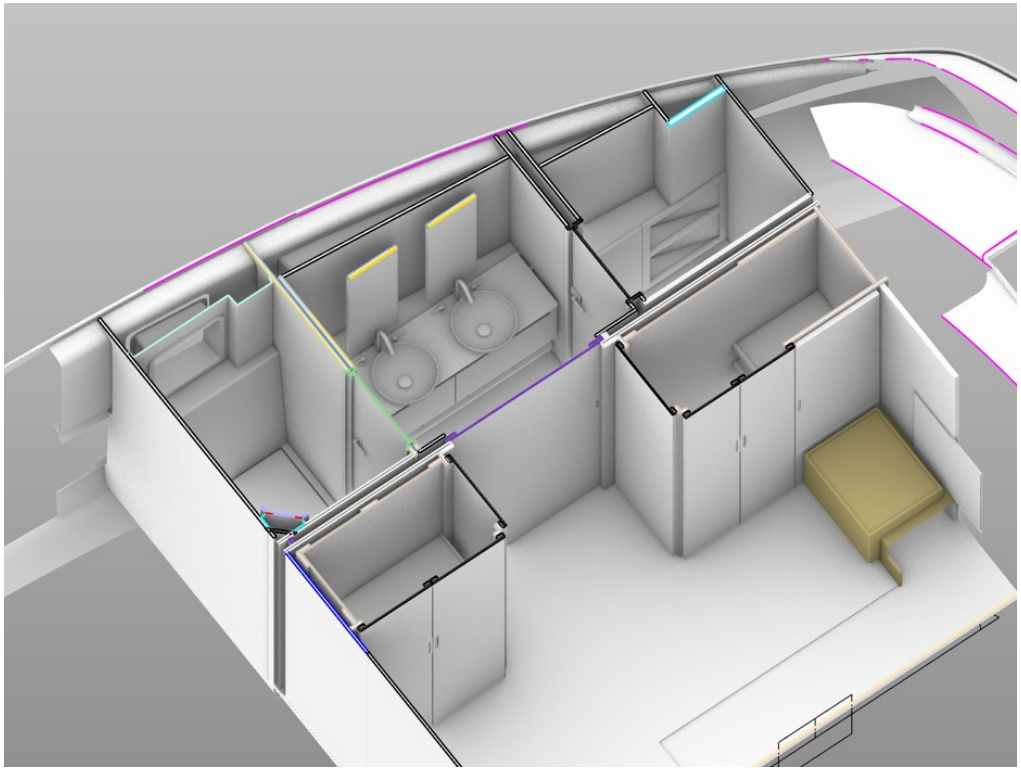

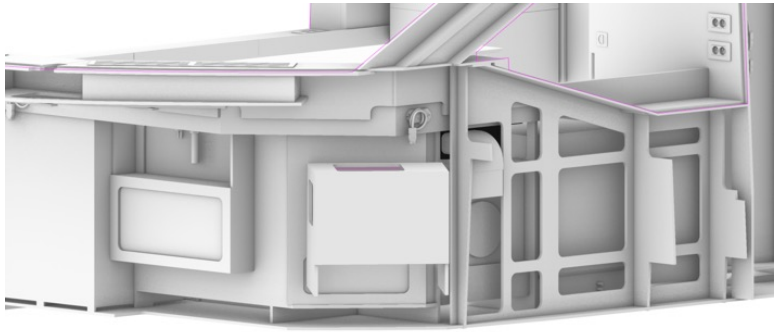

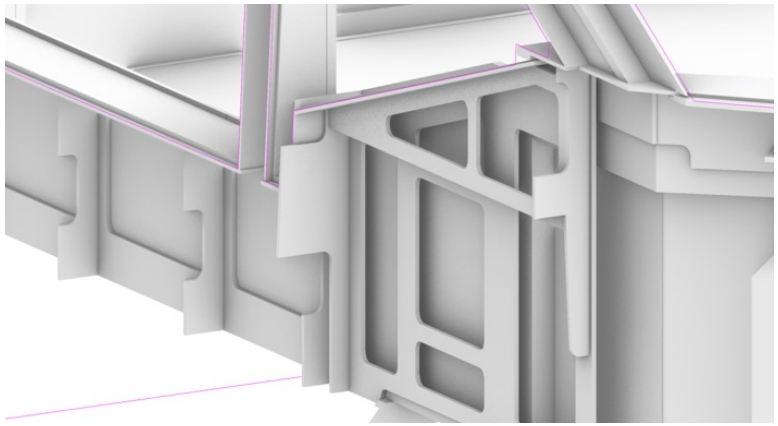

DECK APPLIANCES

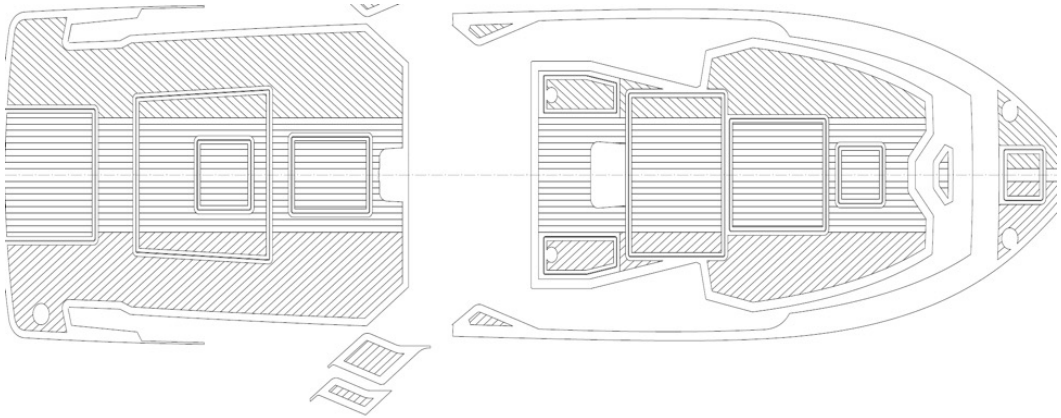

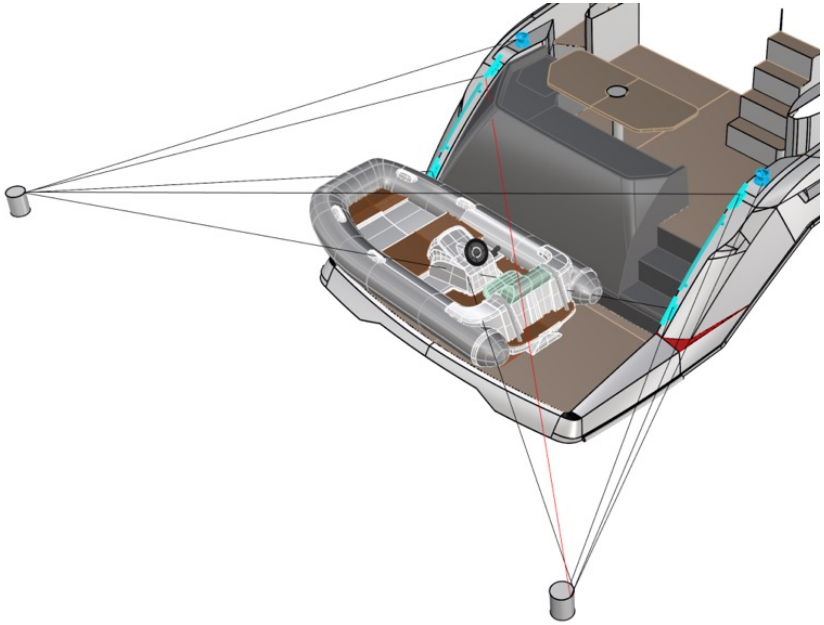

LIGHT PLAN

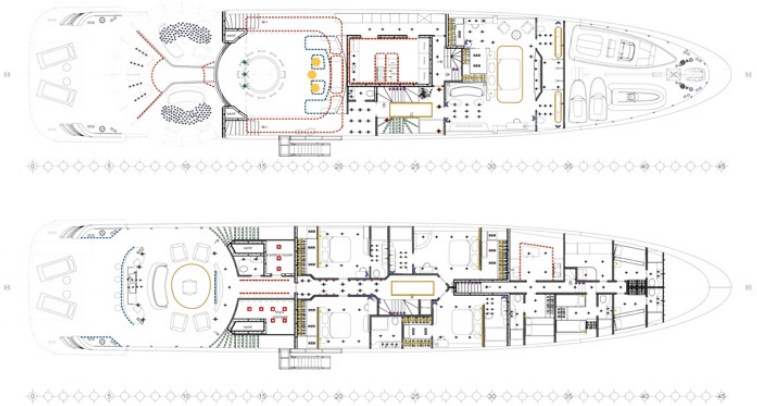

TAG	TYPE	Q.TY
	WATERPROOF LED STRIP-LIGHT ON THE CEILING	
	COURTESY LED STRIP- LIGHT	
	WATERPROOF LED STRIP-LIGHT UNDER FURNITURES	
	LED LIGHT PANEL DIFFUSER	
	EXTERNAL COURTESY LIGHT	22/43
	DIRECTIONAL SPOTLIGHT	3/3
	POOL LIGHT	0/4
	WETBAR SPOTLIGHT	0/3
	SPOTLIGHT RECESSED	305/378
	CYLINDRICAL SPOTLIGHT	106/114
	RECESSED LINEAR SPOTLIGHTS	6/6
	SPOTLIGHT A	4/4
	SPOTLIGHT B	5/5
	WALL LIGHT	13/18
	WINE CELLAR LIGHT	0/2
	READING LAMP	16/18
	COURTESY LIGHT	33/69
	LED STRIP-LIGHT CLOSET	
	UNDERWATER LIGHT	0/20
	CHANDELIER	3/3
	LED STRIP-LIGHT ON THE CEILING	
	TECHNICAL AREA LIGHT	9/25

Amedeo Migali
Managing Director

> +39 3294186028

> a.migali@micad.it

MICAD
THE CREATIVE ENGINEERING COMPANY

Registered Office

Via Leuca, 198 - 73100 Lecce (Italy)

> Headquarter

Via Augusto Imperatore, 16 - 73100 Lecce (Italy)
T: +39 0832 359672

> R&D Department

Via Flavia, 23/1 - 34148 Trieste (Italy)
T: +39 040 8333888

www.micad.it - info@micad.it